27-Sep-2016 11:08:11 Create By Administr

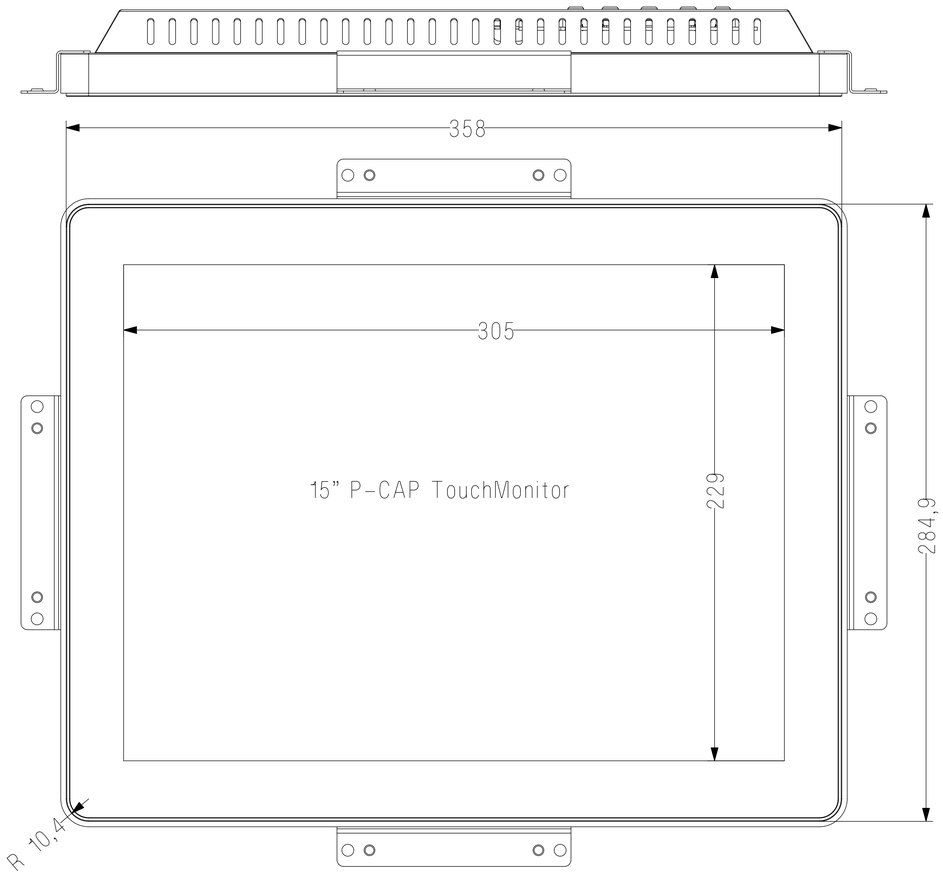

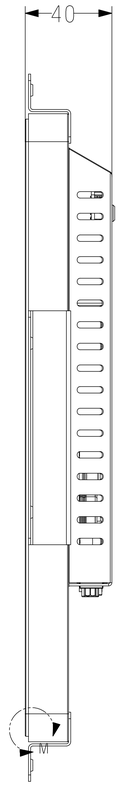

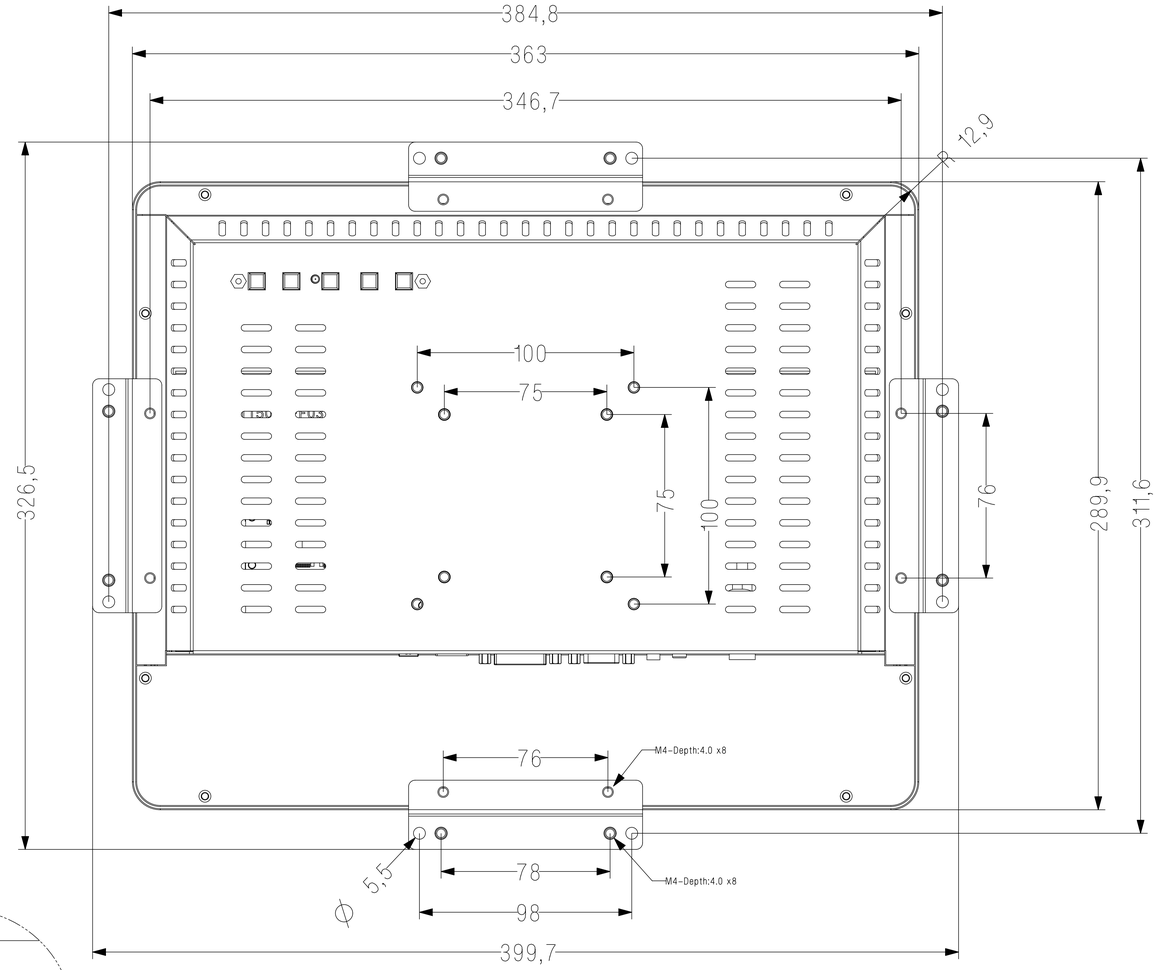

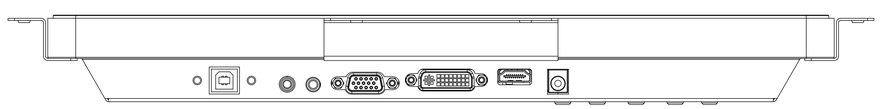

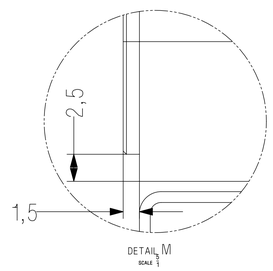

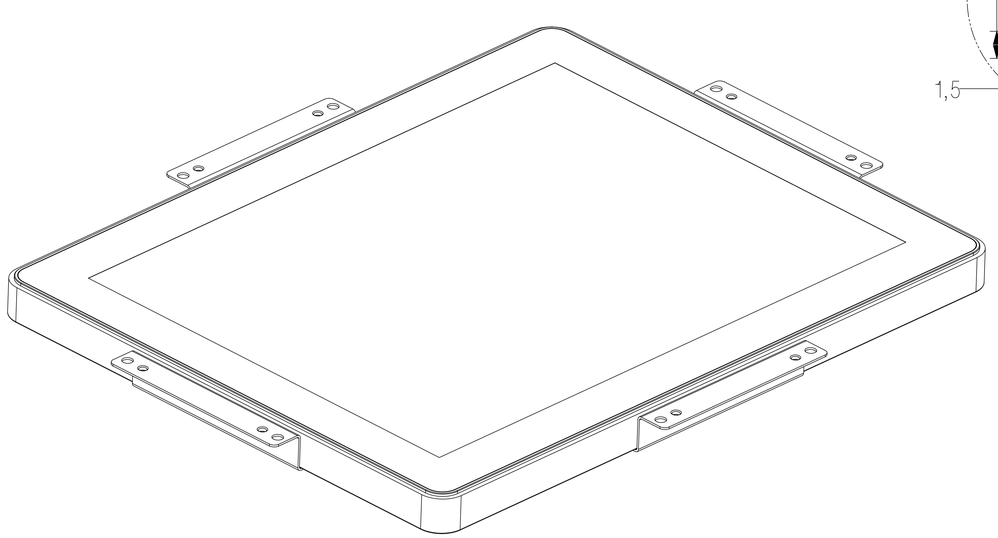

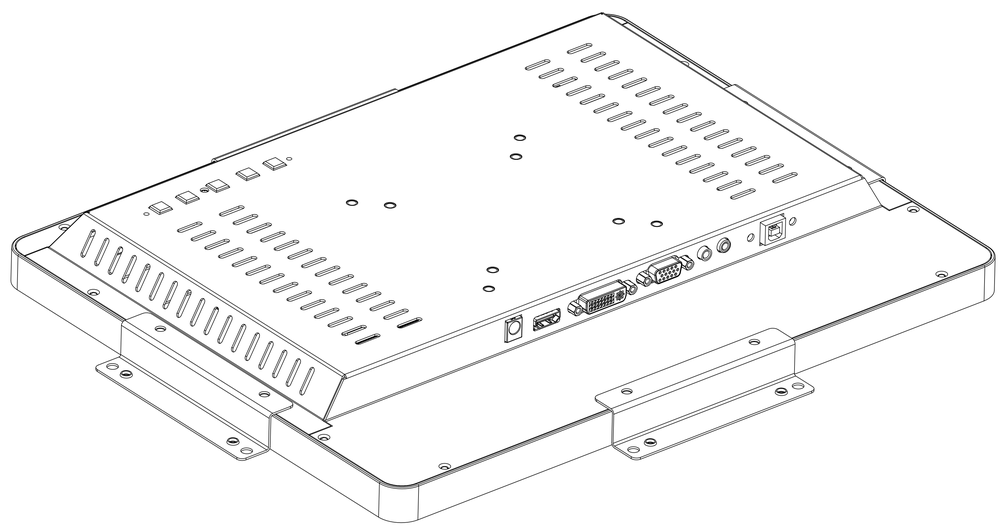

15寸

2016-07-15